PROJECT REFERENCE NO.	SHEET NO.
W-5601GP	2A-1
R/W SHEET NO.	
ROADWAY DESIGN ENGINEER	HYDRAULICS ENGINEER

DOCUMENT NOT CONSIDERED FINAL UNLESS ALL SIGNATURES COMPLETED

PAVEMENT SCHEDULE	
T	EARTH MATERIAL
U	EX. PAVEMENT

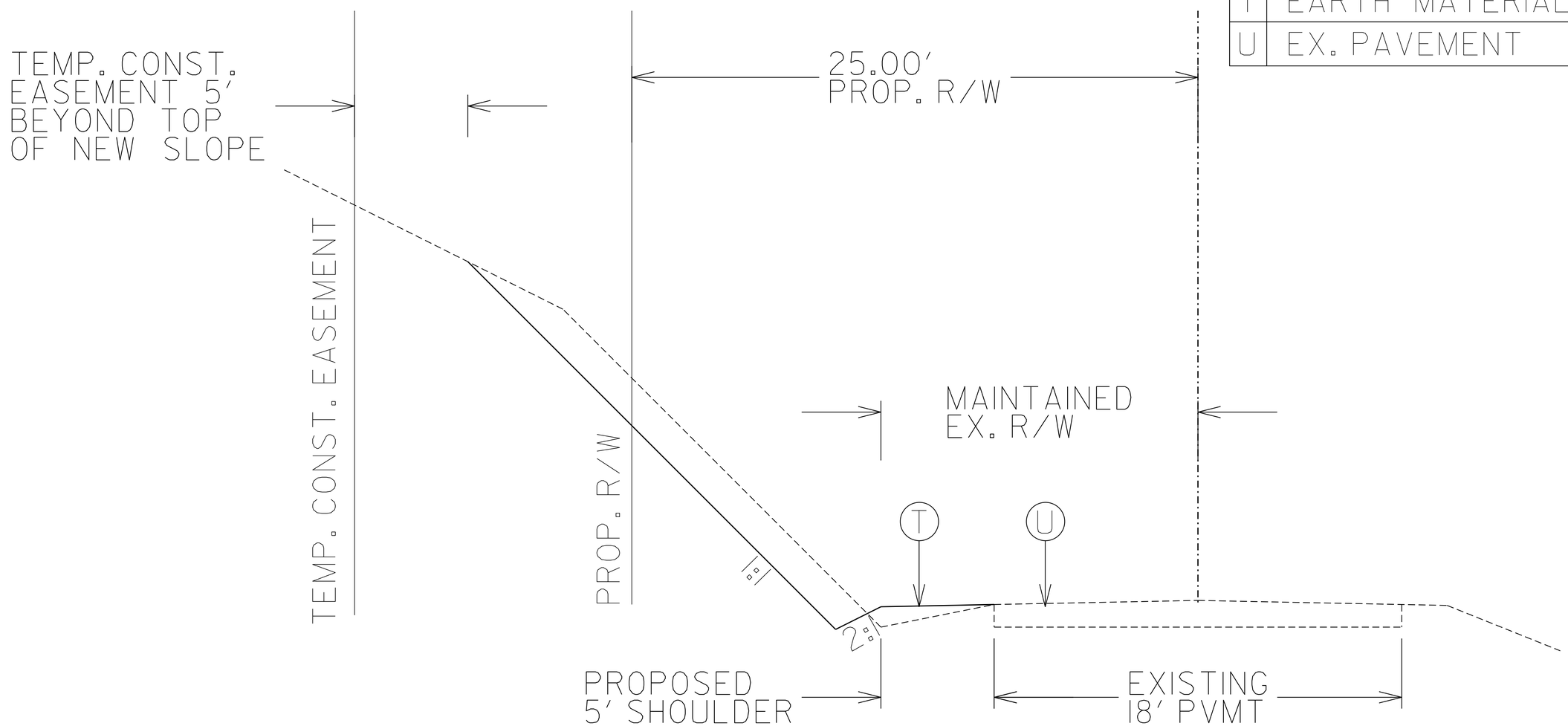

TYPICAL SECTION
STA: 10+50.00 to STA: 14+26.19
N.T.S.

5/14/99

29-NOV-2016 14:19
\Projects\W-5601GP\Rdy_typsec.dgn